radiomuseum.org: RCX75 professional A 53316011

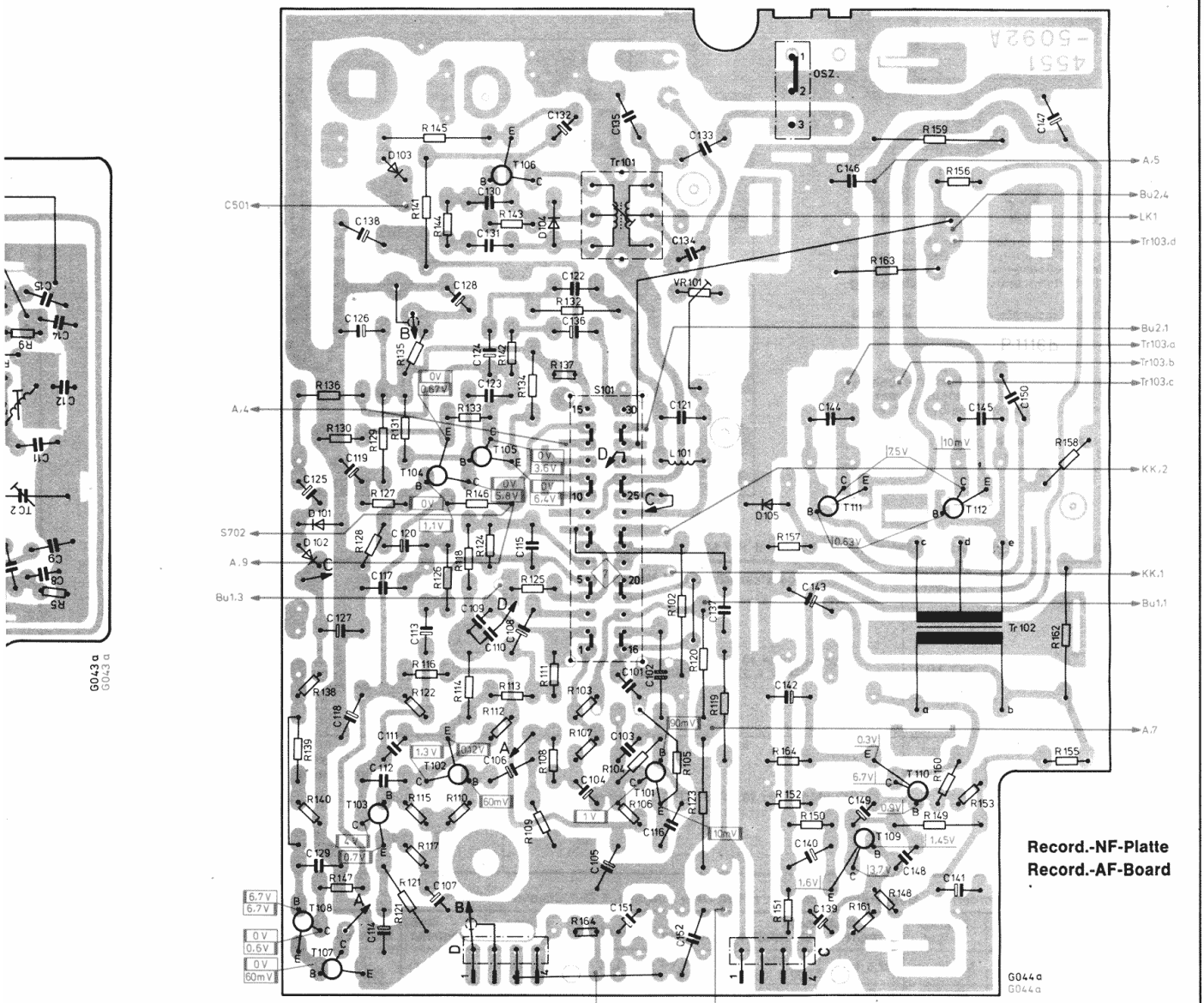

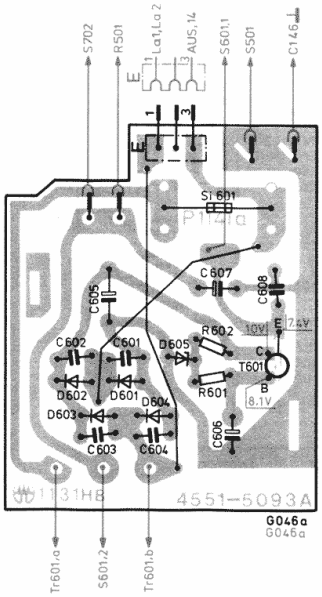

Motor-Entstörung
Motor interference suppression

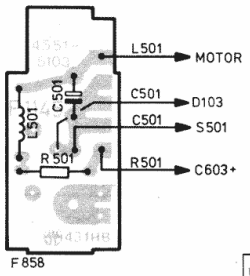

AM-Antennenplatte — AM-Antenna-Board

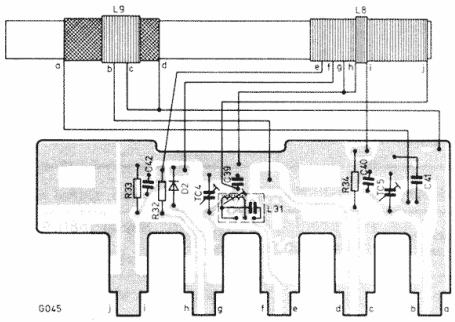

board

www.radiomuseum.org; upload by Wolfgang Bauer; download by Alain Busschaert Thu Dec 12 07:20:18 UTC 2024 [1870 x 2638, 356kb, ? DPI]